LOGIC TABLE FOR BATTERY AND PARALLEL SWITCH SETTINGS

SWITCHES			EXCITE	CHARGING SRC FOR		STARTER	HOUSE	GEN OK
MAIN	START	PARALLEL	ALTRNTR*	START	MAIN	POWER	POWER	TO RUN
X	O	O	NO	None	None	offline	Main Batt	No (No start)
X	X	O	YES	DDC	Alt1+Alt2	Start Batt	Main Batt	Yes (Start from Start)
X	O	X	YES	None	Alt1+Alt2	Main Batt	Main Batt	Yes (Start from Main)
X	X	X	NO	None	None	Main+Start	Main+Start	No
O	O	O	NO	None	None	offline	None	No
O	X	O	YES	DDC	None	Start Batt	None	No
O	O	X	NO	None	None	None	None	No
O	X	X	YES	DDC	None	Start Batt	Start Batt	No**

* Red Text indicates the Pos Start Bus Bar is energized to 12VDC and thus Power is supplied to the MC-612. "YES" indicates alternator should be on. The only problem occurs when both Parallel and Start switches are on and the engine is running.
** Voltage sense for Generator is on Main Batt, thus cannot charge Start Batt with Genset directly.
Note: Radios and Pumps are on separate circuits and have independent power sources.

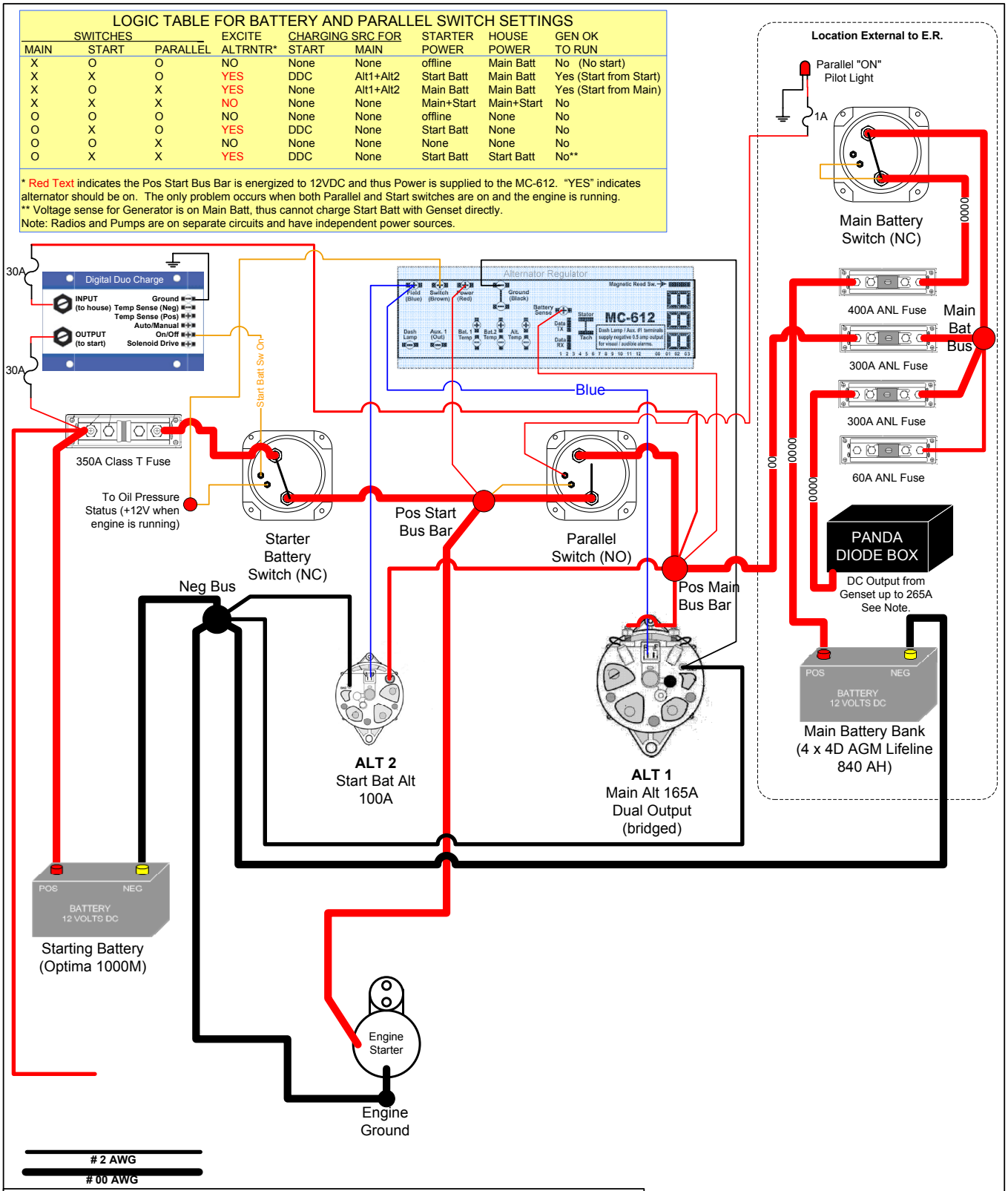

S/V *BEATRIX* - KELLY-PETERSON 44 #286 (1980)			
TITLE		PAGE	
Engine Controls - Simplified Two Alternator Installation		3 OF 18	
REV.	DESCRIPTION	DATE	BY
D	Diagram showing cable runs for high current cables in Engine Room	6/17/2007	JMS